DAS HERZ DER FRISCHE

SEMI HERMETIC RECIPROCATING COMPRESSORS

MINI-RACK

BA-521-1-AUS

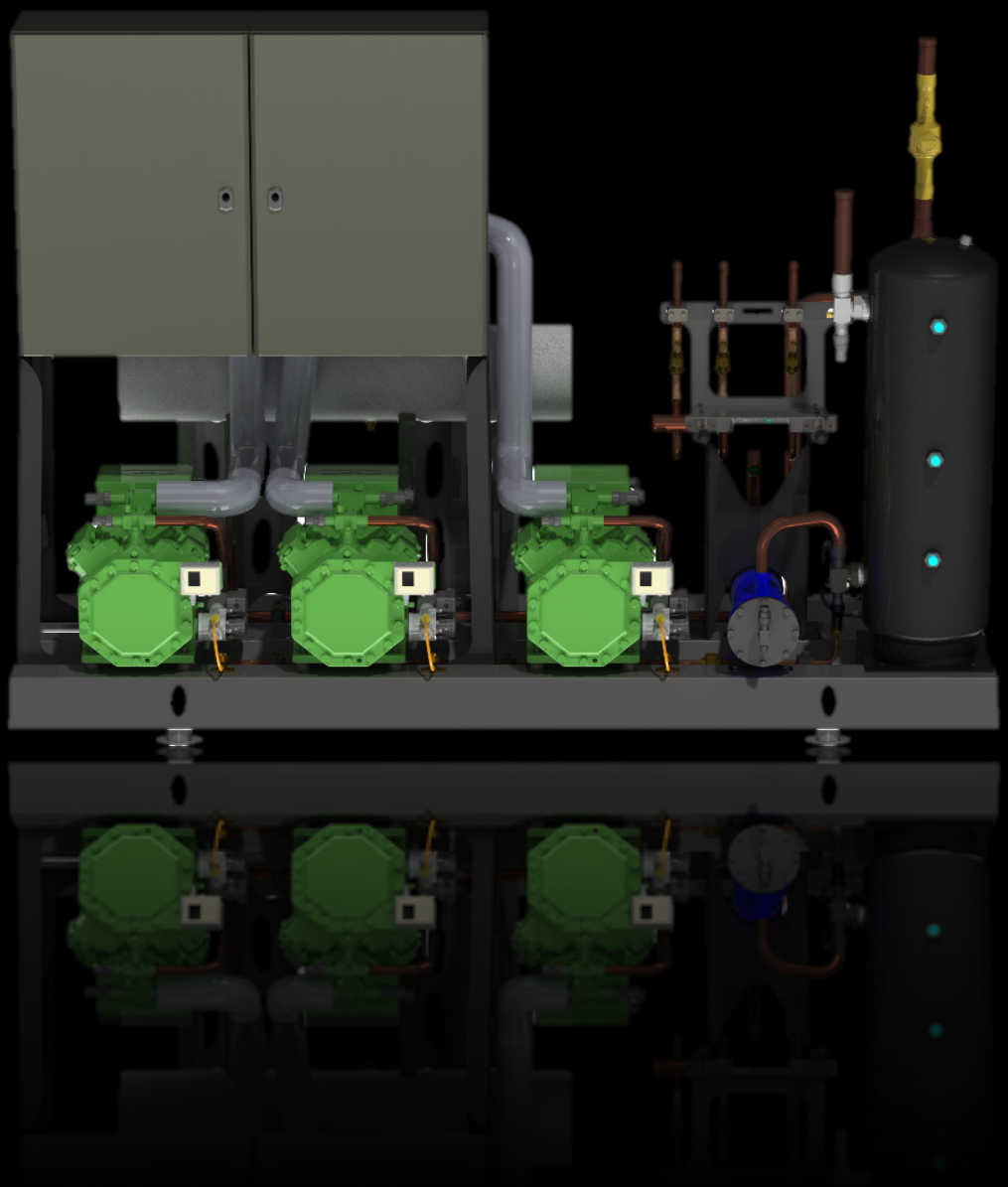

BITZER MINI RACK

CONTENT

CONTENT	PAGE
Product Nomenclature	2
Multiple Semi-Hermetic Compressors	3
Standard Features	3
Options	3
Ecoline Compressor Technology	4
Selector Software	6
Technical Data	7
List of Components	8
Dimensional Data and Drawing	9
Notes	11

EXPLANATION OF TYPE DESIGNATION

MINI-4 4CES-9Y

Rack Series

MINI-4 4CES-9Y

Number of Compressors

MINI-4 4CES-9Y

Compressors Model

MULTIPLE SEMI-HERMETIC COMPRESSORS

The influence of refrigeration on the environment has increasingly become the focus of public discussion. Therefore energy efficiency of refrigeration systems is an essential criterion. The lower the energy consumption the more favourable are the environmental balance and life cycle costs. Multiple compressor systems are considered one of the favourite methods for capacity control.

BITZER's multiple compressor mini racks offer high flexibility and a variety of capacity range on a compact platform. They are designed and manufactured in Australia to offer reduced installation time and minamise maintenance through easy service access and isolation points for all major components.

STANDARD FEATURES

Two, three or four compressor racks
Suction gas header with liquid floodback protection
Suction demountable filters
Fully insulated suction lines
Vertical liquid receiver
Demountable liquid line drier, sight glass assembly
High efficient oil Separator with oil level sight glass
Oil filter assembly
Non adjustable high pressure safety switch per compressor
Oil return sight glass
Anti vibration mounting pads
Manufactured under ISO 9001 quality control
Fully wired switch board and controller

OPTIONS

CRII capacity control
CM-RC-01 Module
Compressor head fan
Adjustable compressor safety switch

MINI RACK WITH ECOLINE COMPRESSORS

BITZER has always paid special attention to the efficiency of compressors and a few years ago introduced the BITZER ECOLINE series which has been optimised especially for R134a.

Additional models have now been added to the BITZER ECOLINE series and it has been further developed for the universal use with different refrigerants at an extended application range. This includes, R134a, R404A, R407A, R407C, R407F, R507A and new transition refrigerants such as R513A, R448A and R449A, whilst still incorporating the extra high efficiency and moderate pressure levels (reduced leakage rates) common to the series.

BITZER ECOLINE compressors can also be used at very low condensing temperatures a beneficial seasonal energy efficiency ratio beyond comparison.

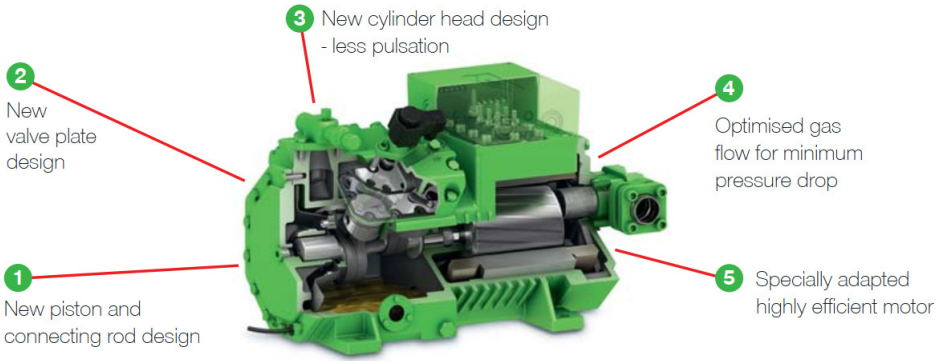

THE CRII SYSTEM

Capacity control is often required to match the output of a refrigeration, air-conditioning or heat pump system to the actual requirement. It prevents high switching frequency of the compressor and this ensures more efficient operation of the system.

The CRII system is designed for the special requirements of intelligent system controls that enables higher cycling frequency of capacity control.

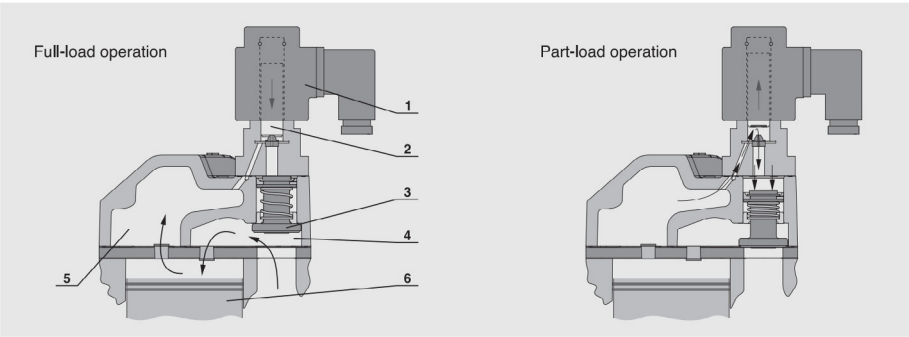

1 Solenoid coil
2 Armature (spring-loaded)
3 Control piston
4 Suction gas chamber
5 Discharge gas chamber
6 Piston

THE MINI RACK CONTROLLER

BITZER has developed a new "Intuitive IQ Rack Controller" to provide accurate control of the compressor and condenser operation whilst providing significant improvements in user friendliness for commissioning and service.

The Intuitive IQ Rack Controller can accurately control multiple suction groups and/or condensers whilst providing the user with flexibility to add monitoring points through the optional expansion cards. Further enhancements such as GUI, touch screens and evaporator controls offer a flexible solution.

As an optional feature BITZER utilises the intuitive BITZER IQ rack controller to operate and control the functionality of the BITZER CRII capacity control system. When electrical switchboard and control is included the BITZER mini rack will be paired with the intuitive BITZER IQ rack controller.

The intuitive BITZER IQ rack controller can be partnered with CM-RC-01 compressor protection modules to provide never before seen compressor intelligence and insight to compressor operation.

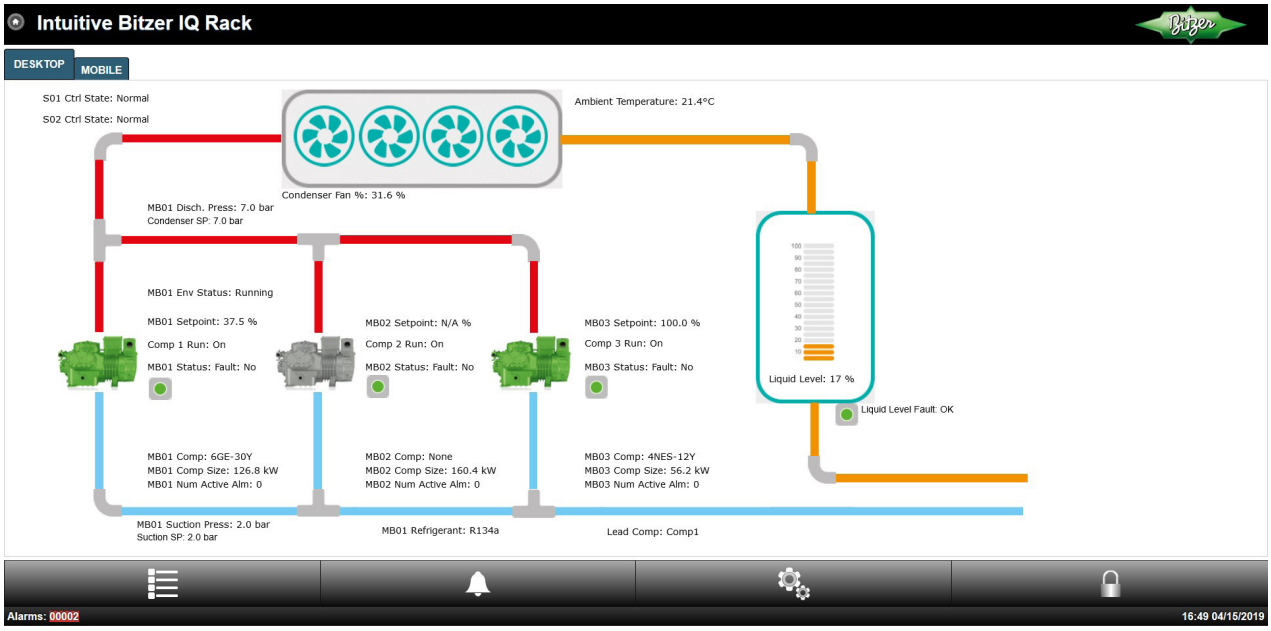

BITZER RACK SELECTOR SOFTWARE

The BITZER RACK SELECTOR SOFTWARE is available as an online version, it is compatible with all browsers including iOS and android and always up to date.
It covers:

- Performance data for most common refrigerants at freely selectable operating conditions
- All relevant technical data
- 2 modes of selection and calculation results
- Sales drawing showing installed components
- Pipe and instrumentation diagram (P&ID)
- Standard features plus selectable options
- More BITZER products

https://bitzerselect.com.au

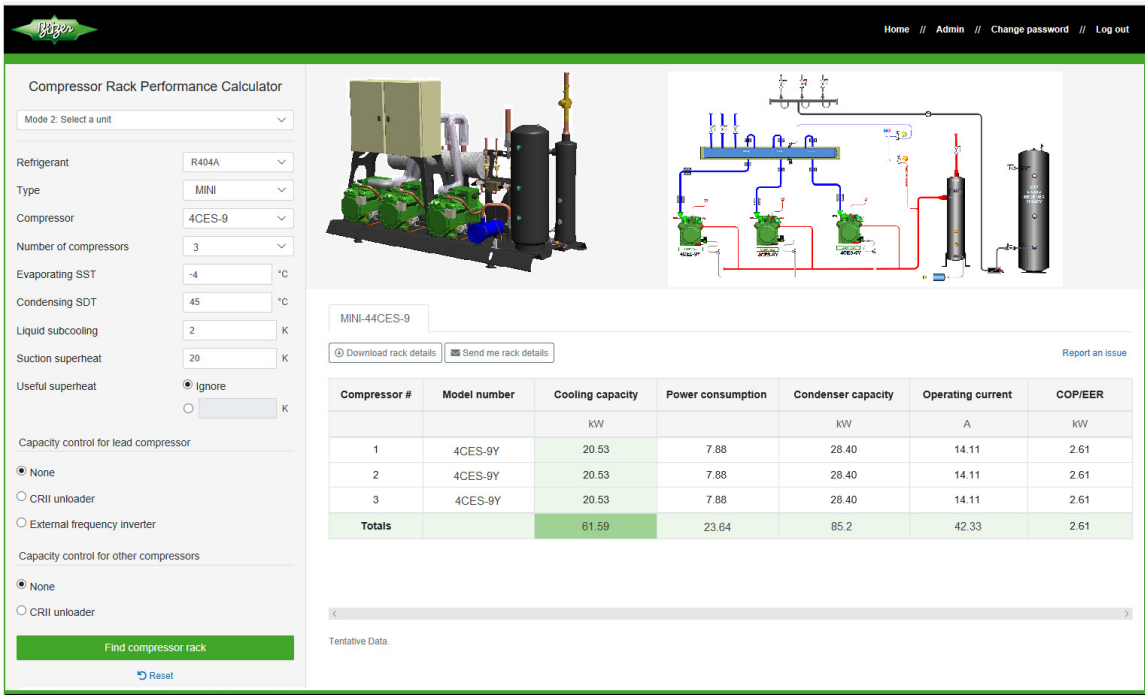

TECHNICAL DATA

Unit Model	Displacement m3/h	Motor Version	Motor Connection Voltage	Max Operating Current Amps	Starting current Amps	Maximum Power Consumption kW	Crankcase Heater W	No. Of Comp.
MINI-2 4FES-5	36.1	1	380-420VY/3/50Hz	21.60	124.40	11.60	240	2
MINI-2 4EES-6	45.44	1		27.20	124.40	15.20	240	2
MINI-2 4DES-7	53.68	1		33.00	164.80	17.80	240	2
MINI-2 4CES-9	64.96	1		40.40	164.80	22.60	240	2
MINI-2 4BES-9	72.26	1		36.00	164.80	24.60	240	2
MINI-3 4FES-5	54.15	1		32.40	186.60	17.40	360	3
MINI-3 4EES-6	68.16	1		40.80	186.60	22.80	360	3
MINI-3 4DES-7	80.52	1		49.50	247.20	26.70	360	3
MINI-3 4CES-9	97.44	1		60.60	247.20	33.90	360	3
MINI-3 4BES-9	108.39	2		54.00	247.20	36.90	360	3
MINI-4 4FES-5	72.2	1		43.20	248.80	23.20	480	4
MINI-4 4EES-6	90.88	1		54.40	248.80	30.40	480	4
MINI-4 4DES-7	107.36	1		66.00	329.60	35.60	480	4
MINI-4 4CES-9	129.92	1		80.80	329.60	45.20	480	4
MINI-4 4BES-9	144.52	1		72.00	329.60	49.20	480	4

PRODUCT LAYOUT WITH MAIN COMPONENTS

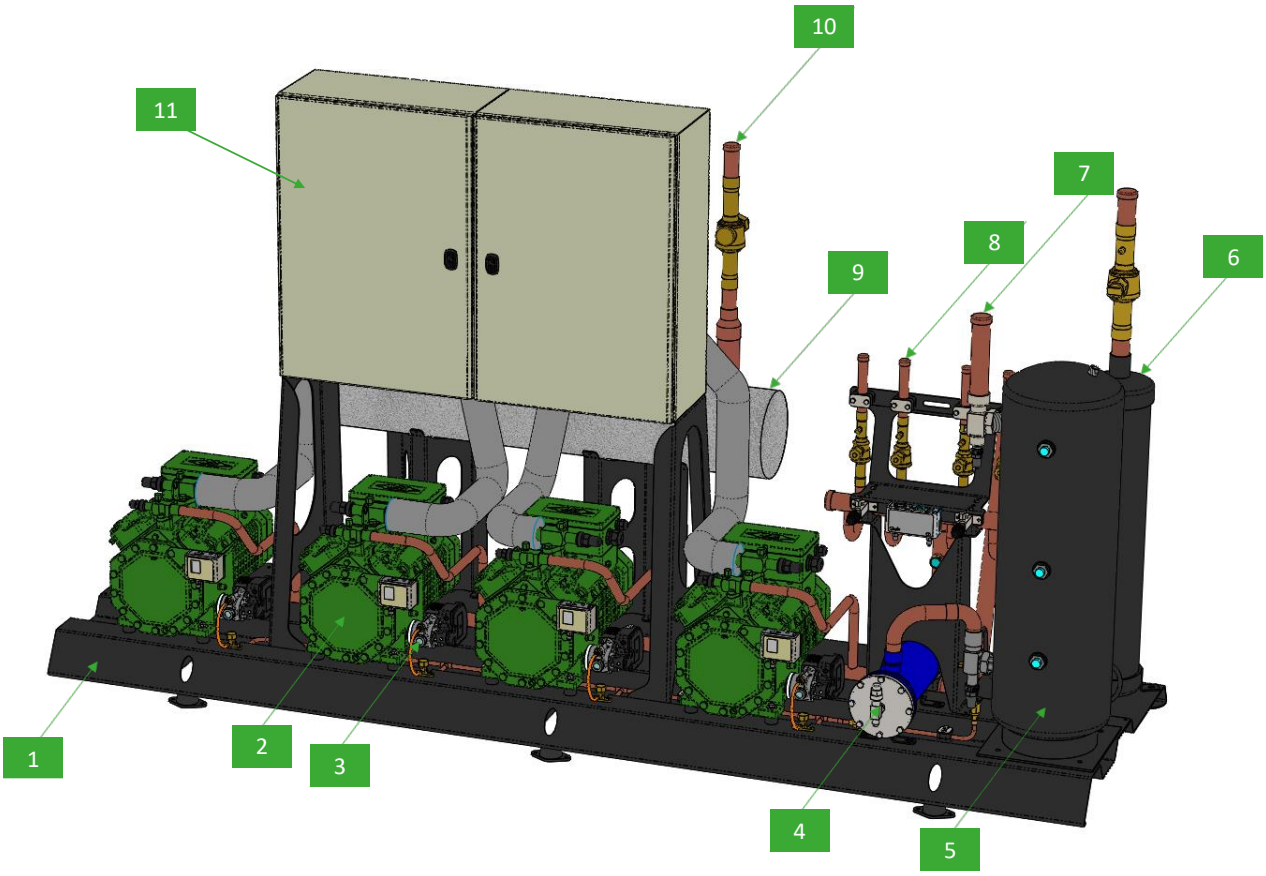

1	Black powder coated steel base
2	BITZER ECOLINE compressor
3	Electronic Compressor oil level regulator and safety
4	Filter drier with changeable core
5	Liquid receiver with sight glass
6	Oil separator with Oil sight glass
7	Receiver inlet drain pipe
8	Liquid line outlet connections with ball valves
9	Insulated suction header
10	Suction line inlet pipes with ball valves
11	Electrical switchboard

DIMENSION DRAWING

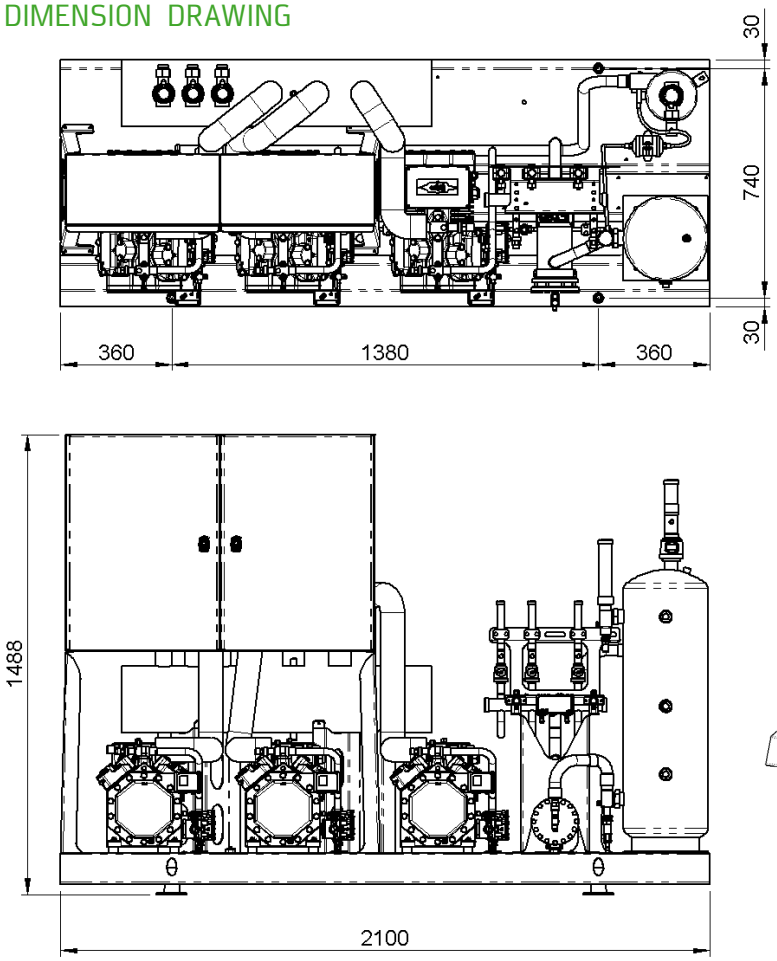

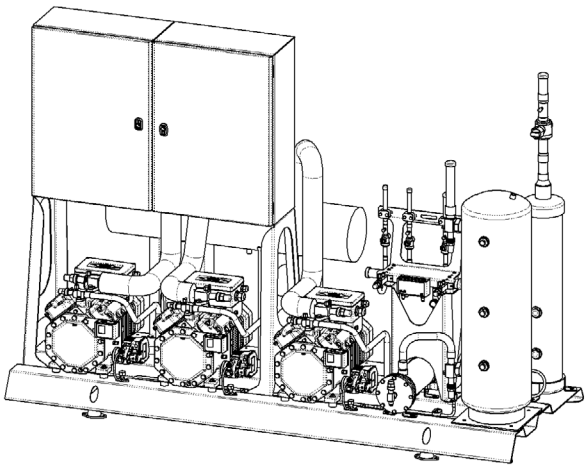

Unit Model	Suction line connection (inch)	Discharge line connection (inch)	Receiver inlet connection (inch)	Liquid line connection (inch)	Weight kg
MINI-2 4FES-5	2 x 1-3/8	7/8	1-1/8	2 x 7/8	370
MINI-2 4EES-6	2 x 1-3/8	7/8	1-1/8	2 x 7/8	376
MINI-2 4DES-7	2 x 1-3/8	1-1/8	1-3/8	2 x 7/8	382
MINI-2 4CES-9	2 x 1-3/8	1-1/8	1-3/8	2 x 7/8	390
MINI-2 4BES-9	2 x 1-3/8	1-1/8	1-3/8	2 x 7/8	390
MINI-3 4FES-5	3 x 1-3/8	1-1/8	1-3/8	3 x 7/8	455
MINI-3 4EES-6	3 x 1-3/8	1-1/8	1-3/8	3 x 7/8	461
MINI-3 4DES-7	3 x 1-3/8	1-3/8	1-5/8	3 x 7/8	467
MINI-3 4CES-9	3 x 1-3/8	1-3/8	1-5/8	3 x 7/8	475
MINI-3 4BES-9	3 x 1-3/8	1-3/8	1-5/8	3 x 7/8	475

DIMENSION DRAWING

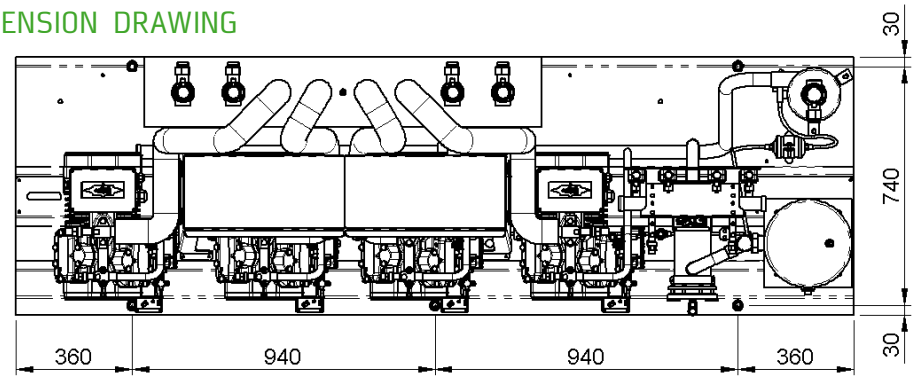

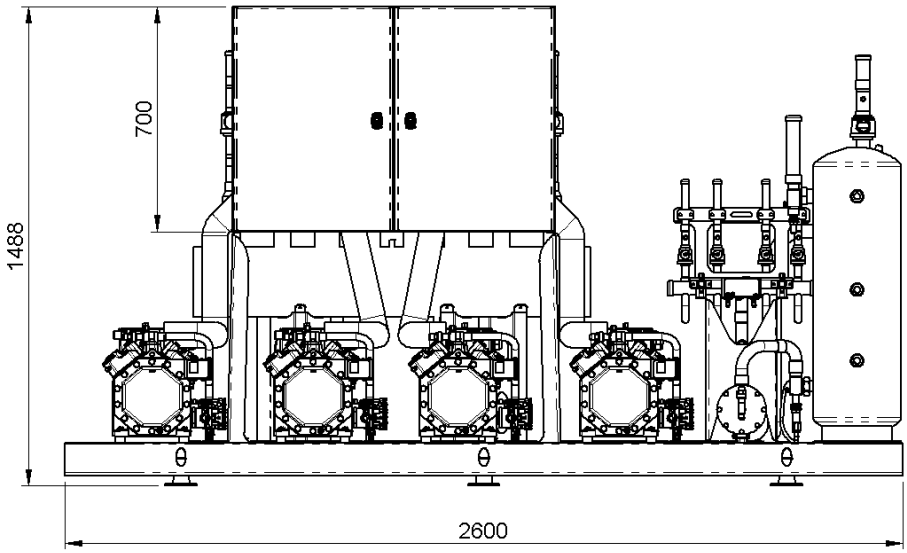

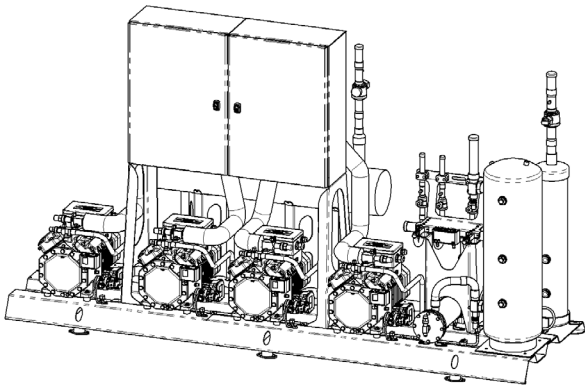

Unit Model	Suction line connection (inch)	Discharge line connection (inch)	Receiver inlet connection (inch)	Liquid line connection (inch)	Weight kg
MINI-4 4FES-5	4 x 1-3/8	1-3/8	1-5/8	4 x 7/8	540
MINI-4 4EES-6	4 x 1-3/8	1-3/8	1-5/8	4 x 7/8	546
MINI-4 4DES-7	4 x 1-3/8	1-5/8	1-5/8	4 x 7/8	552
MINI-4 4CES-9	4 x 1-3/8	1-5/8	1-5/8	4 x 7/8	560
MINI-4 4BES-9	4 x 1-3/8	1-5/8	1-5/8	4 x 7/8	560

NOTES

BITZER AUSTRALIA PTY LTD

134-136 Dunheved Circuit

St Marys NSW 2760 // Australia

Tel +61 1300 BITZER (1300 248 937)

Fax +61 (2) 9673 4698

info@bitzer.com.au

NEW ZEALAND

Unit 5, 5-7 Henry Rose Place

Albany Auckland 0632 // New Zealand

Tel +64 (9) 415 2030

sales@bitzer.co.nz

04-2019